5. Nonlinear Structural Analysis and Inelastic Spectra

Lesson Objectives:

1) Outline the procedure to solve inelastic damped structural systems using both the Central Difference and Newmark's Methods for nonlinear systems.
2) Define corresponding linear system, normalized yield strength, and yield strength reduction factor as well as its associated terminology.
3) Describe the response of a system when it undergoes inelastic action or yielding.
4) Outline the construction and usage of inelastic response spectra.
5) Define the equal energy absorption principle.

Background Reading:

1) Read _____.

Nonlinear Structural Analysis:

1) For a nonlinear system, the most efficient and accurate way to evaluate its dynamic response, is use of a _____.
2) This considers a stochastic time-varying dynamic load:
   a. _____
   b. _____
3) Time stepping methods can be classified in two classes:
   a. _____ - _____
   b. _____ - _____

   _____
4) Examples of time stepping methods include:
   a. _____
   b. _____
   c. _____

Central Difference for Nonlinear Systems:

1) The equation of motion to solve can be written as:

2) Recall that this method is _____ and based on the _____ for velocity and acceleration.
   a. Refer to _____.
3) To account for the nonlinearity, _____ is replaced by _____.
4) This will produce the following expressions to find the response at time _____:

5) The only modification is within _____. Therefore the procedure identified previously for linear elastic systems holds true.

Summary for the Central Difference Method:

1) The central difference method can be outlined in Table 1.

Table 1. Central Difference Methodology[1].

1.0	*Initial calculations*
1.1	$\ddot{u}_0 = \dfrac{p_0 - c\dot{u}_0 - ku_0}{m}$.
1.2	$u_{-1} = u_0 - \Delta t\, \dot{u}_0 + \dfrac{(\Delta t)^2}{2}\ddot{u}_0$.
1.3	$\hat{k} = \dfrac{m}{(\Delta t)^2} + \dfrac{c}{2\Delta t}$.
1.4	$a = \dfrac{m}{(\Delta t)^2} - \dfrac{c}{2\Delta t}$.
1.5	$b = k - \dfrac{2m}{(\Delta t)^2}$.
2.0	*Calculations for time step i*
2.1	$\hat{p}_i = p_i - au_{i-1} - bu_i$.
2.2	$u_{i+1} = \dfrac{\hat{p}_i}{\hat{k}}$.
2.3	If required: $\dot{u}_i = \dfrac{u_{i+1} - u_{i-1}}{2\Delta t}$; $\ddot{u}_i = \dfrac{u_{i+1} - 2u_i + u_{i-1}}{(\Delta t)^2}$.
3.0	*Repetition for the next time step*
	Replace i by $i+1$ and repeat steps 2.1, 2.2, and 2.3 for the next time step.

Newmark's Method for Nonlinear Systems:

1) Recall that this method is _____ and solution at time _____ is determined from the equilibrium condition at time _____.
2) The resisting force (_____) is an implicit nonlinear function of the unknown _____.
3) As a result, _____ is required and common to most _____.
4) Common iterative approaches include _____
_____

[1] Table obtained from: Chopra, Anil K. (2012). *Dynamics of Structures*. 4th Edition. Prentice Hall.

Newton-Raphson Method:

1) The nonlinear static equation to be solved at an instance of time is:

2) The task is to determine the _____due to the applied force.
3) Newton-Raphson Method uses a _____ to solve the nonlinear equation.
   a. _____.
4) An example is illustrated below:

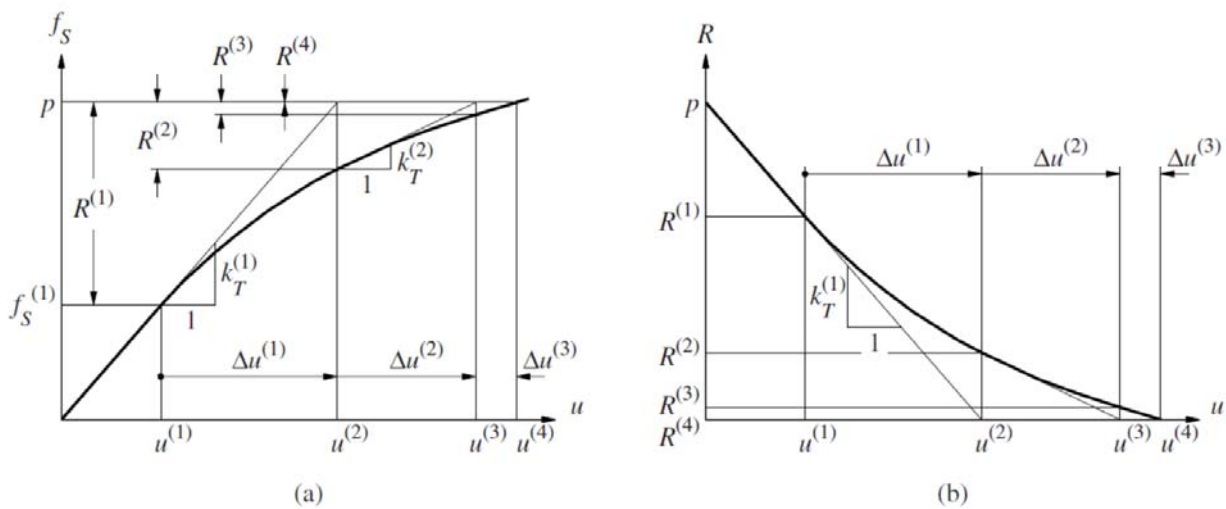

Figure 1. Example of Newton-Raphson method for iteration of the nonlinear response (a): applied and resisting forces and (b) residual force[2].

5) The Modified Newton-Raphson Method uses the _____ _____.
6) Other iterative schemes include: _____
7) For any iterative method, _____ is checked.
   a. Some type of error within a specified _____.

[2] Figure obtained from: Chopra, Anil K. (2012). *Dynamics of Structures*. 4th Edition. Prentice Hall.

Newmark's Method Procedure:

1) Since the response of the system is _____, the simplification (for no _____) cannot be utilized.
2) Details on how to implement this method are presented in the text.
3) Summary table is shown below.

Table 2. Newmark's Method Methodology for Nonlinear Systems[3].

Special cases
(1) Average acceleration method ($\gamma = \frac{1}{2}, \beta = \frac{1}{4}$)
(2) Linear acceleration method ($\gamma = \frac{1}{2}, \beta = \frac{1}{6}$)

1.0 *Initial calculations*
- 1.1 State determination: $(f_S)_0$ and $(k_T)_0$.
- 1.2 $\ddot{u}_0 = \dfrac{p_0 - c\dot{u}_0 - (f_S)_0}{m}$.
- 1.3 Select Δt.
- 1.4 $a_1 = \dfrac{1}{\beta(\Delta t)^2}m + \dfrac{\gamma}{\beta\Delta t}c$; $a_2 = \dfrac{1}{\beta\Delta t}m + \left(\dfrac{\gamma}{\beta} - 1\right)c$; and $a_3 = \left(\dfrac{1}{2\beta} - 1\right)m + \Delta t\left(\dfrac{\gamma}{2\beta} - 1\right)c$.

2.0 *Calculations for each time instant,* $i = 0, 1, 2, \ldots$
- 2.1 Initialize $j = 1$, $u_{i+1}^{(j)} = u_i$, $(f_S)_{i+1}^{(j)} = (f_S)_i$, and $(k_T)_{i+1}^{(j)} = (k_T)_i$.
- 2.2 $\hat{p}_{i+1} = p_{i+1} + a_1 u_i + a_2 \dot{u}_i + a_3 \ddot{u}_i$.

3.0 *For each iteration,* $j = 1, 2, 3 \ldots$
- 3.1 $\hat{R}_{i+1}^{(j)} = \hat{p}_{i+1} - (f_S)_{i+1}^{(j)} - a_1 u_{i+1}^{(j)}$.
- 3.2 Check convergence; If the acceptance criteria are not met, implement steps 3.3 to 3.7; otherwise, skip these steps and go to step 4.0.
- 3.3 $(\hat{k}_T)_{i+1}^{(j)} = (k_T)_{i+1}^{(j)} + a_1$.
- 3.4 $\Delta u^{(j)} = \hat{R}_{i+1}^{(j)} \div (\hat{k}_T)_{i+1}^{(j)}$.
- 3.5 $u_{i+1}^{(j+1)} = u_{i+1}^{(j)} + \Delta u^{(j)}$.
- 3.6 State determination: $(f_S)_{i+1}^{(j+1)}$ and $(k_T)_{i+1}^{(j+1)}$.

Replace j by $j + 1$ and repeat steps 3.1 to 3.6; denote final value as u_{i+1}.

4.0 *Calculations for velocity and acceleration*
- 4.1 $\dot{u}_{i+1} = \dfrac{\gamma}{\beta\Delta t}(u_{i+1} - u_i) + \left(1 - \dfrac{\gamma}{\beta}\right)\dot{u}_i + \Delta t\left(1 - \dfrac{\gamma}{2\beta}\right)\ddot{u}_i$.
- 4.2 $\ddot{u}_{i+1} = \dfrac{1}{\beta(\Delta t)^2}(u_{i+1} - u_i) - \dfrac{1}{\beta\Delta t}\dot{u}_i - \left(\dfrac{1}{2\beta} - 1\right)\ddot{u}_i$.

5.0 *Repetition for next time step.* Replace i by $i + 1$ and implement steps 2.0 to 4.0 for the next time step.

[3] Table obtained from: Chopra, Anil K. (2012). *Dynamics of Structures.* 4th Edition. Prentice Hall.

Corresponding Linear Systems:

1) Recall that an _____ (EPP) system can be constructed for numerous nonlinear structural systems for analysis ease and convenience.
2) Therefore it is often desirable to compare the _____ of an EPP system to peak deformation from a _____ under the same excitation.
3) In this corresponding linear system:
    a. The initial stiffness is identical, as is the system mass and damping.
    b. The natural vibrations of both systems are _____ under small oscillations, such that _____.
    c. At larger amplitudes of motion, the natural vibration period is often _____ _____.
4) Sketch:

Normalized Yield Strength and Yield Reduction Factors:

1) Within an EPP system, a normalized yield strength factor can be defined as:

2) In the equation above, _____ can be interrupted as the minimum strength required for the system to remain _____ during its excitation.
3) A value _____ implies that the system will _____ and undergo __ _____.
4) Alternatively, a yield strength reduction factor can be defined as:

5) If the value of _____ is greater than unity, the system is not sufficiently strong to remain _____.
6) This can be related to ductility, specifically based on the _____ _____.

Yielding on Structural Systems:

1) It is critical to understand how the response of structural systems is affected by _____ _____ or _____.
2) For this comparison, an EPP SDOF system is compared to a linear elastic SDOF under the 1940 El Centro ground motion.
3) In Figure 2, the time history response of a linear elastic system of weight *w* is illustrated.
    a. Natural period is _____.
    b. Damping is _____.
    c. The system oscillates about its _____ up to its peak deformation of _____.
    d. The elastic resistance force _____, the peak value _____ is normalized by its weight as _____.
        i. This is the minimum force required for the system to _____ _____.
    e. For undamped systems: _____.

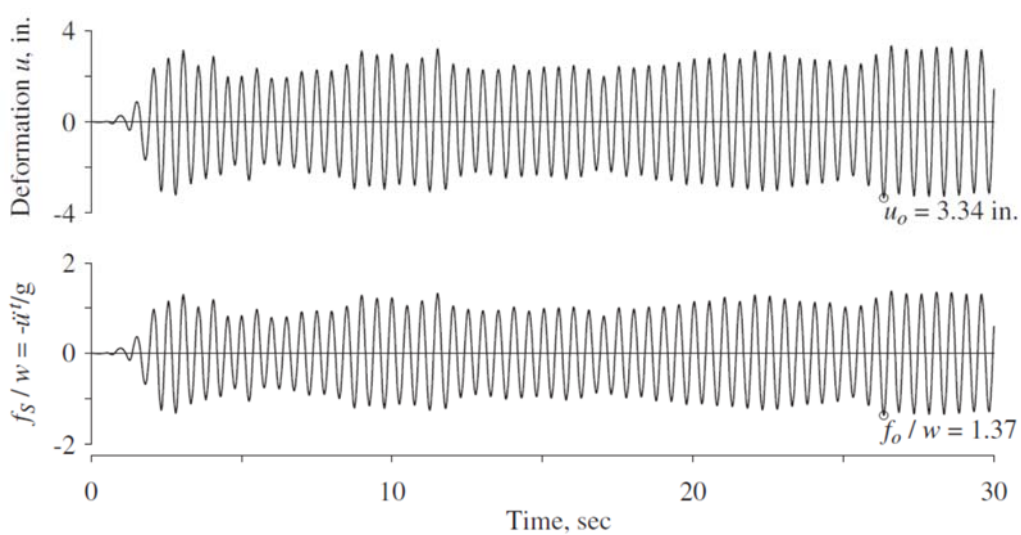

Figure 2. Response of a _____ system of period _____ and damping _____ under the 1940 El Centro ground motion[4].

[4] Figure obtained from: Chopra, Anil K. (2012). *Dynamics of Structures*. 4th Edition. Prentice Hall.

4) In Figure 3, the time history response of an elastic-perfectly plastic system of weight *w* is illustrated.
    a. The same mass, stiffness, and negligible damping of the preceding linear elastic system.
    b. The normalized strength is _____.
    c. Or in other words, the yield strength reduction factor is _____.
    d. Therefore yield strength of the system can be computed as:

5) Within Figure 3, the first inelastic cycle is examined in detail over a-b-c-d-e-f-g.
    a. Initially the system deformations are small and remains _____.
    b. At point b, deformation reaches the yield deformation for the first time, _____ deformation or _____ begins.
    c. From b to c – the system is yielding and the force is constant of value _____. The system is on the "perfectly plastic" branch of the hysteresis. At point c, a local deformation maximum is reached, the velocity of the system is _____, the deformation begins to _____, the system begins to unload elastically (along c-d), and yielding is not occurring.
    d. From c to d, unloading continues until point d. At point d, the system begins to deform and load in the opposite direction and continues until the yield point (point e) is achieved.
    e. At point e, yielding begins in the opposite direction and continues until point f (local deformation maximum). The force is a constant value of _____.
    f. At point f, the velocity of the system is _____, the deformation begins to _____, the system begins to unload elastically (along f-g), and yielding is not occurring.
    g. Reloading brings the resisting force to zero in the system at point g.

6) Therefore any **additional loading continues along this branch** (from f-g) until the resisting force exceed the yield force.

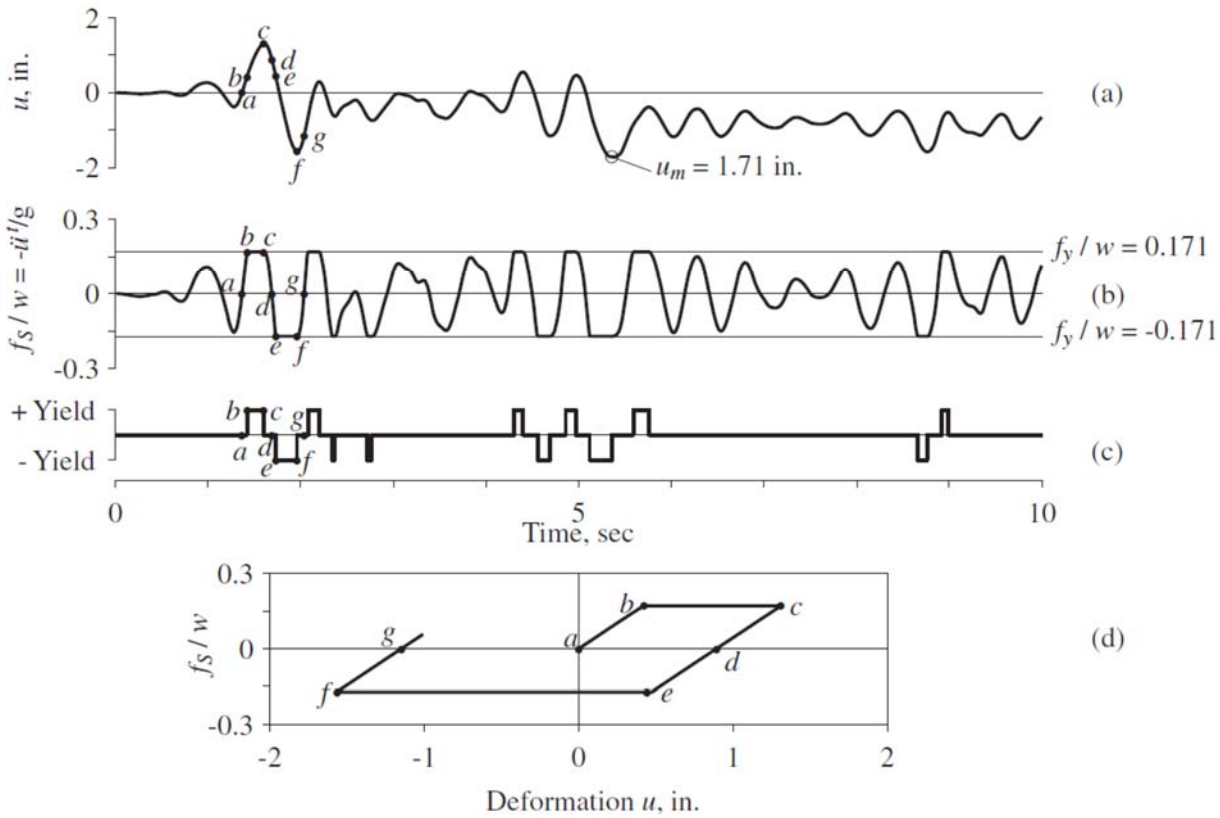

Figure 3. First ten second response of an _____ system of period _____, damping _____, and normalized yield strength _____ under the 1940 El Centro ground motion: (a) displacement response time history, (b) resisting force and acceleration time history, (c) intervals of yielding, and (d) the force-displacement relationship for a single cycle[5].

7) As anticipated, the time variation of the yielding system differs from that of an inelastic system.
8) Specifically, the inelastic system after its yields does not oscillate about its _____ _____.
9) Yielding causes the system to _____ from its initial equilibrium position and the system oscillates about a new equilibrium position until another instance of _____.
10) Therefore often the excitation has ceased, the system will come to rest at a position generally different than that of its initial position. This is often referred to as _____

[5] Figure obtained from: Chopra, Anil K. (2012). *Dynamics of Structures*. 4th Edition. Prentice Hall.

_____.

11) A linear system does not experience any _____.

12) For any excitation, the peak deformation is a function of the yield strength.

13) To illustrate how its response is a function of the yield strength, refer to Figure 4 for four different SDOF systems.

‘

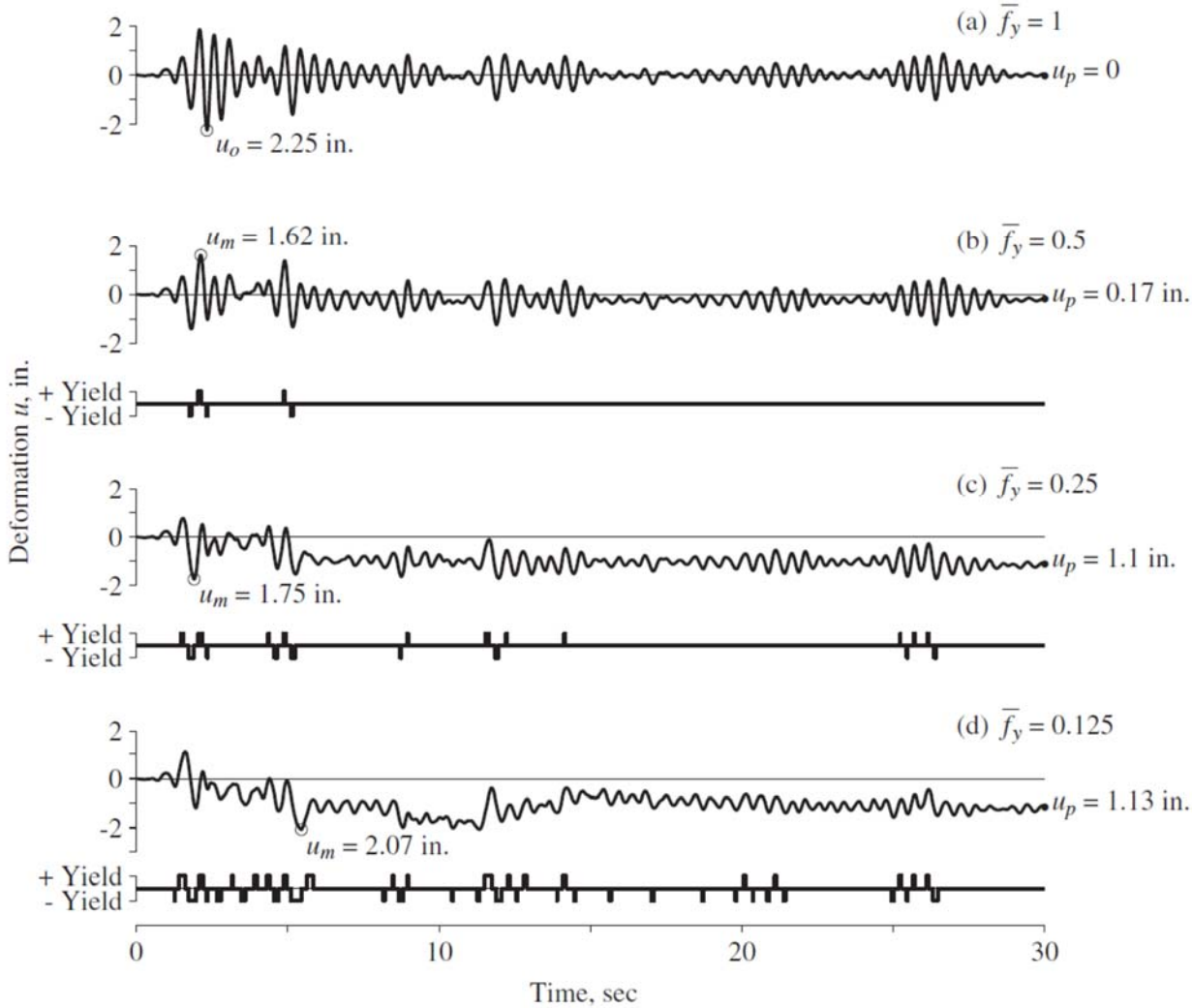

Figure 4. First ten second response of the 1940 El Centro ground motion where: _____, _____, and various yield strengths[6].

[6] Figure obtained from: Chopra, Anil K. (2012). *Dynamics of Structures*. 4th Edition. Prentice Hall.

14) As one may anticipate, a system with lower yield strength will _____ and for _____.

15) With the additional yielding, the permanent deformation (denoted as _____) tends to increase.

    a. Note this is a general trend, but not always.

    b. This is because the values of _____ and _____ depend on the natural vibration period _____ of the system and the characteristics of the ground motion.

16) For the middle time history of Figure 4, _____, the ductility demand can be calculated as imposed on the elastic-perfectly plastic system:

Ductility Demand, Peak Deformations, and Normalized Yield Strength Versus Period:

1) Only one natural vibration period was considered in the previous figures.
2) Herein, let's explore the relationship of the elastic-perfectly plastic systems and their dependence on natural vibration period _____.
3) This is illustrated in Figure 5 for the 1940 El Centro ground motion and four values of the normalized yield strength, namely: _____.
4) From this figure, let's inspect the three spectral regions.
5) Displacement sensitive region - _____:
    a. In this region, a very flexible SDOF system stays essentially _____ _____.
    b. The peak deformation equals the peak _____ and independently of _____. Therefore _____ and _____. Reference Figure 6.
6) Velocity sensitive region:
    a. _____ may be smaller than _____ or in other words _____ may not exceed 1.
    b. As a result, both are affected by variations in the normalized yield strength, and the ductility demand maybe larger or smaller than _____.
    c. While the influence of _____ is small, it is not _____.
7) Acceleration sensitive region:
    a. _____ is greater than ____ and therefore _____ increases with decreasing _____ (decreasing yield strength).
    b. As a result, the ductility demand can be much larger than _____ as confirmed in Figure 6.
    c. This implies that the ductility demand on very-short period systems (rigid) may be large if their strength is only _____ that required for the system to remain elastic.

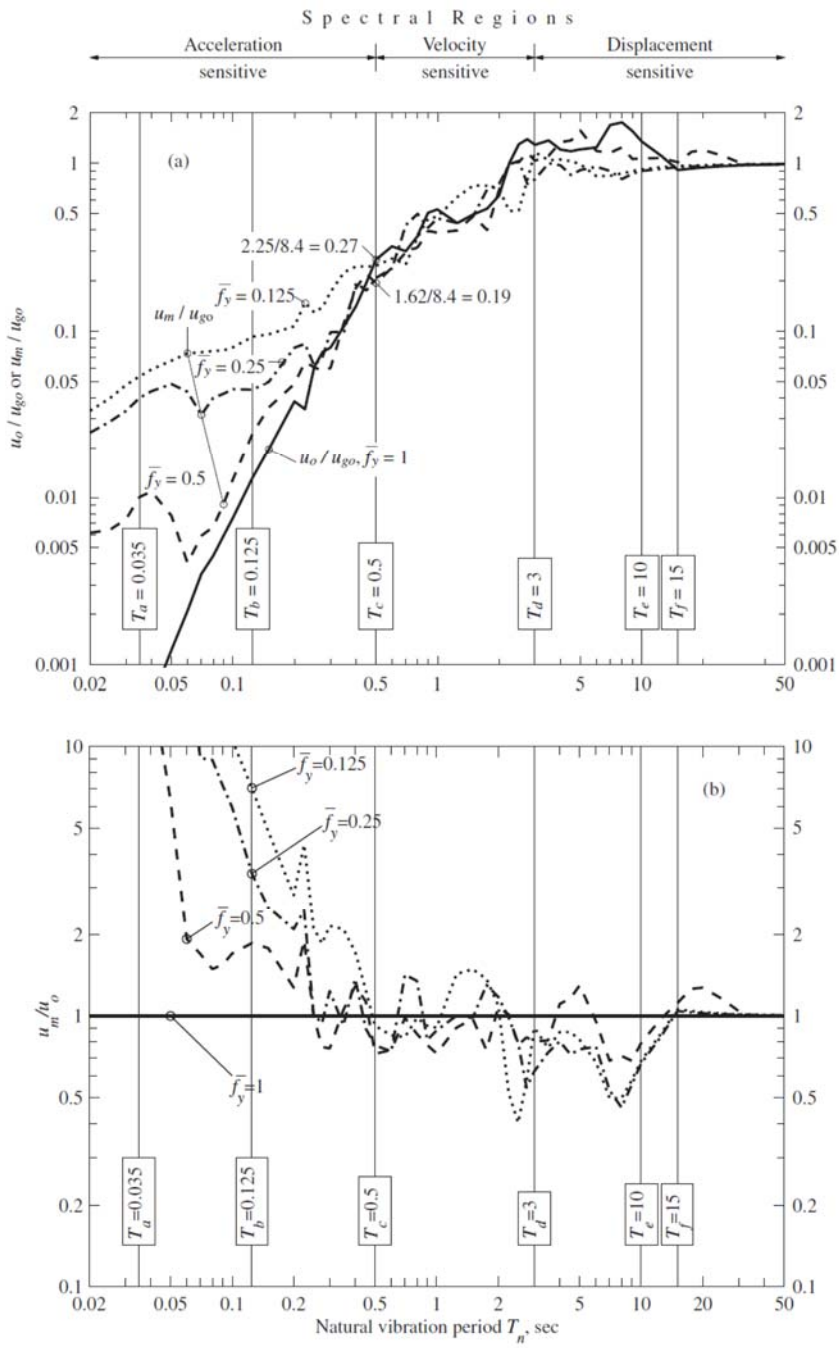

Figure 5. 1940 El Centro ground motion: (a) peak deformations _____ and _____ of elastic-perfectly plastic systems and corresponding linear systems and (b) ratio of _____. Note natural vibration period is varied, while _____ and _____[7].

[7] Figure obtained from: Chopra, Anil K. (2012). *Dynamics of Structures*. 4th Edition. Prentice Hall.

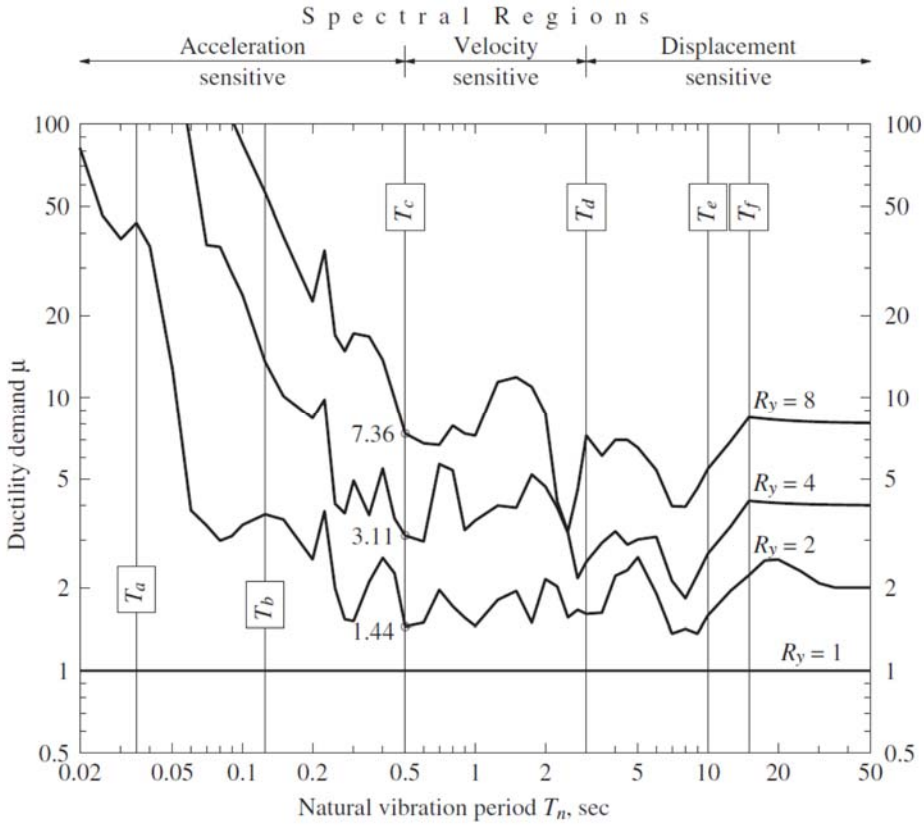

Figure 6. Ductility demand for elastic-perfectly plastic systems under the 1940 El Centro ground motion. Note: damping is _____, normalized yield strength is _____ _____ or the yield strength reduction factor is _____[8].

[8] Figure obtained from: Chopra, Anil K. (2012). *Dynamics of Structures*. 4th Edition. Prentice Hall.

Inelastic Response Spectra-Ductility Spectra:

1) As done for linear elastic systems, response spectra can be developed for inelastic structures.
2) However, the spectral responses for inelastic structures depend on the _____, _____, and _____.
3) Consider an EPP system with the properties shown below.

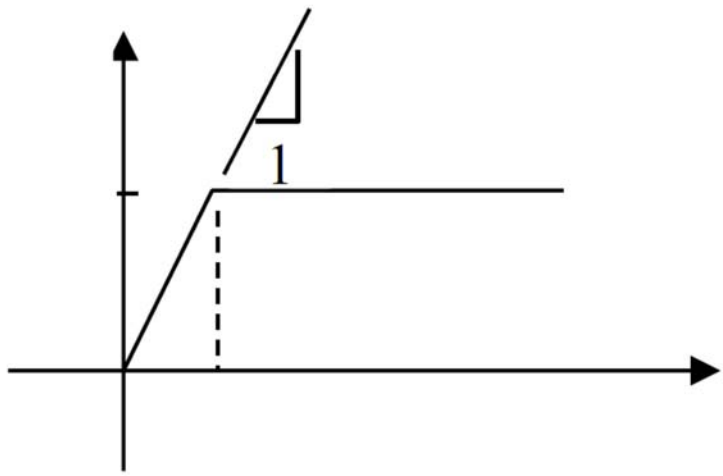

Figure 7. Idealized elastic-perfectly plastic structural system.

4) The equation of motion can be expressed as:

5) In this equation, the natural frequency and damping ratio are defined in terms of the _____ _____ of the system.
6) Therefore let's express this equation with dimensionless terms.
7) Normalized displacement can be defined as:

8) Normalized force can be defined as:

9) It is noted that the value of _____ is less than or equal to unity.

10) Manipulating the equation of motion by dividing by _____:

11) Additional dimensionless resistance factors can be defined.

12) The term _____ reflects the resistance of the structure with respect to the maximum inertial force induced by the rigid-body motion of the structure under the excitation.

13) The term _____ is the structural resistance normalized by its own weight.

14) Therefore we can also write and simply the equation of motion as:

15) From the above equation, it is observed that the ductility demand _____ depends on the:

a. _____

b. _____

c. _____

16) This formulation can be utilized to construct ductility spectra.

a. Similar to elastic response spectra, but the _____ needs to be considered.

b. Useful design tools.

17) The shape of the ductility spectra also depend on the _____ _____ being assumed. In this case, it is assumed to be elastic-perfectly plastic.

18) Examples of ductility spectra are shown in Figure 8.

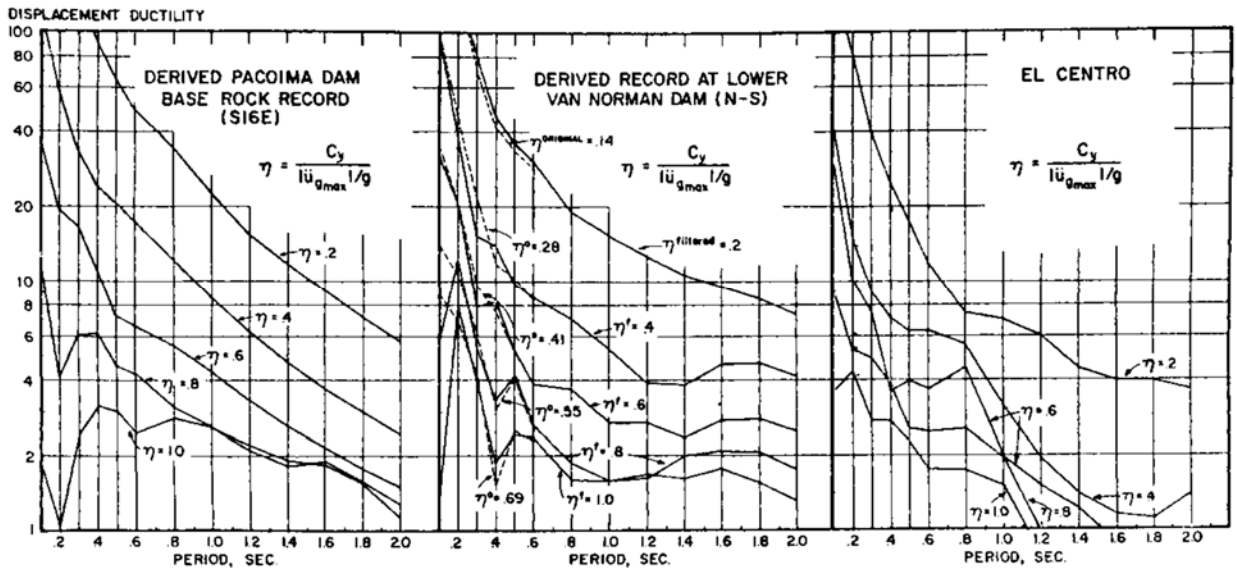

Figure 8. Ductility spectra for various ground motions considering 5% damped of critical[9].

19) To construct ductility spectra one needs to solve the normalized equation of motion using a time stepping algorithm for various values of _____.

20) Once constructed, ductility spectra can be used to determine the required displacement ductility given the _____:

a. Calculate the seismic resistance factor:

b. Determine _____ from the spectral curves given specific values of _____ _____.

[9] Figure obtained from: Bertero, V.V., Mahin, S.A., & Herrera, R.A. (1978). Aseismic Design Implications of Near-Fault San Fernando Earthquake Records. *Earthquake Engineering & Structural Dynamics*, *6*(1), 31-42.

21) Alternatively, one can determine the required _____ for given _____ and the ductility that can be provided by the structure is:
    a. Determine _____ from the spectral curves given specific values of _____ _____.
    b. Calculate the required resistance coefficient:

Other Inelastic Response Spectra:

1) In addition to ductility spectra, other inelastic response spectra can be constructed.
2) This includes:
    a. _____
    b. _____
3) In a total displacement response spectra – the maximum displacement response is plotted against the natural frequency of the structure.

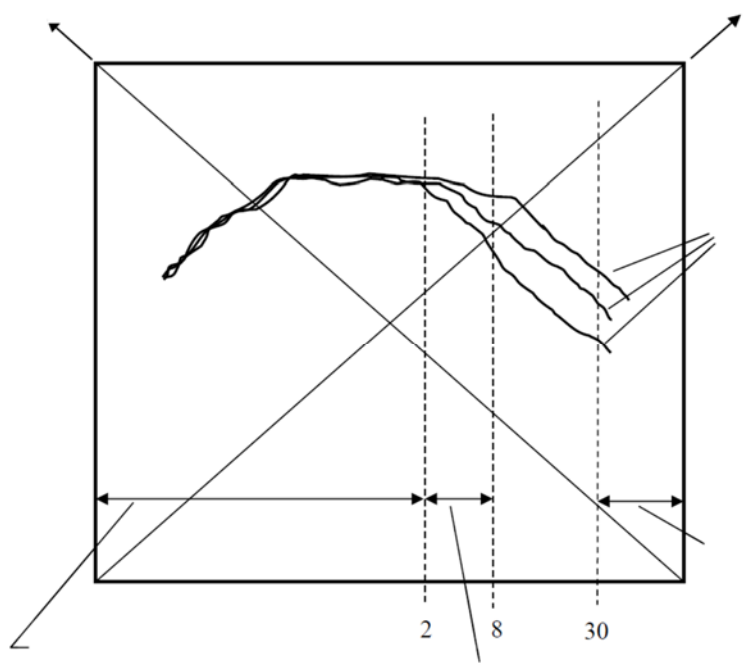

Figure 9. Total displacement response spectra.

4) As illustrated in the previous figure, the total displacement spectra for numerous earthquake records demonstrate that for natural frequencies less than _____, the maximum displacement response is not significantly influenced by its _____.
5) Furthermore, studies also indicate that for natural frequencies of the range _____, the energy absorbed by a system is not significantly affected by its _____.
6) For a frequency of less than 2 Hz, the yield strength can be related to ductility as:

7) For a frequency between 2 and 8 Hz, this leads to the equal energy absorption between inelastic and corresponding linear systems. Refer to Figure 10.

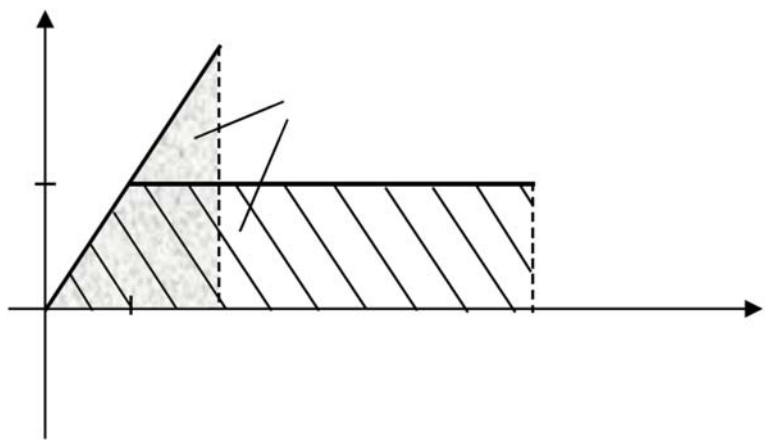

Figure 10. Equal energy absorption.

8) For this case the yield strength can be related to ductility and its corresponding elastic maximum displacement:

9) The last equation allows use to evaluate the value of required _____ from its elastic response and given ductility demand.